MXM GRAPHICS MODULE

Version 3.0
Technical Brief

Release 1.0

May 15, 2008

Document Change History

Ver	Date	Resp	Reason for change
1	May 15, 2008	GG, LB, AT	Initial revision.

Introduction

The Mobile PCI Express Module (MXM) is a standard graphics interface for PCI Express systems. This technical brief document summarizes the MXM version 3.0 specifications as well as highlighting the benefits of MXM version 3.0.

Target Markets

MXM is the ideal low power, small form factor, and high performance graphics adapter solution. Typical applications include notebook computers, blade and standard rack mount servers, mobile workstations and alternative form factor PCs including all-in-one, home theater and small form factor PCs.

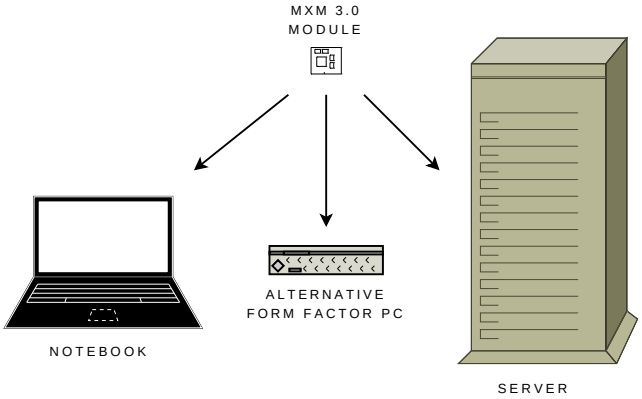

Figure 1: MXM Applications

Background

MXM version 3.0 builds upon the experience gained from several years of implementation of previous versions of the MXM standard. MXM version 3.0, while physically very similar to the previous MXM standards, is not backwards compatible mechanically or electrically. Therefore, an MXM version 3.0 system does not support earlier MXM standard modules nor will previous standard modules work in an MXM version 3.0 system. Support for many leading technologies (PCI-Express Gen2, DisplayPort, etc.) and the desire to make it easier for system designers to implement MXM version 3.0 solutions forced this radical departure from previous MXM standards. MXM version 3.0 provides the path for systems to be more cost effective, thinner, more flexible, easier to manufacture, and more feature rich than previous MXM versions.

Module Compatibility

The goal of the MXM version 3.0 specification is to achieve a level of module interchangeability similar to a desktop system. A compliant module will properly operate in any compliant system without any hardware or firmware modification to either the module or the system. This goal is achieved by defining both software and hardware interfaces. The MXM version 3.0 specification comprises of two detailed specification documents, a hardware specification covering the electrical, mechanical and thermal aspects and a software specification.

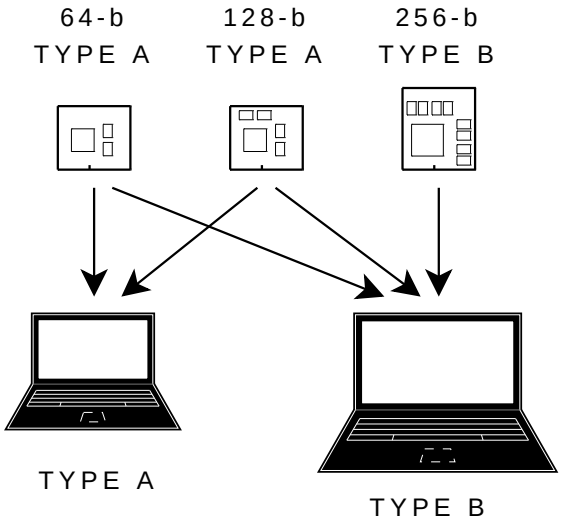

Figure 2: MXM Compatibility

Hardware Specification

The MXM version 3.0 hardware specification defines two electrically, mechanically and thermally compatible form factors (Type A and Type B). The electrical compatibility is provided by the use of a single style connector and pinout for all modules. The thermo-mechanical compatibility allows the use of type A modules on type B systems without any modification to the thermal solution or to the system mechanical design. Note that each type has a distinct form factor and is aimed at different performance requirements and power consumption. Additionally the two form factors have identical 3D forms where they overlap; the larger of the two modules has the same 3D profile as the smaller module plus an extension. This was done to enable systems with a wide range of upgradeability and allows for the design of a single thermal solution across all MXM version 3.0 designs. The form factors defined in the specification provide a simple upgrade/upsell option for both system types. Type A systems can upgrade from a 64-bit GPU to a 128-bit GPU (both on type A modules). Type B systems can upgrade from a 64/128-bit type A module to a 256-bit type B module.

Software Specification

The MXM version 3.0 software specification decouples the graphics module from the system and defines the functional interface between the two. The MXM software infrastructure resides in the system BIOS of the system and includes the characteristics of the system mainly with respect to thermal (graphics power supported by the system) and display configuration (LVDS, DVI, HDMI, DisplayPort, etc.). To complement the software specification and help software designer implementations many MXM version 3.0 software tools are available including an MXM Structure edition tool (MXMedit), system validation tools and sample code.

Major Features

MXM version 3.0 supports the following features:

- up to 16 lanes PCIe Gen2
- 64-b, 128-b and 256-b memory interface using up to 8 DDR2, DDR3, GDDR3, GDDR5 memory devices
- up to 4 Dual mode Display Ports (with support for DVI/HDMI)
- one 24-bit dual link LVDS
- one legacy analog display (multiplexed VGA/TV)

Benefits

MXM version 3.0 reduces significantly the design complexity to integrate graphics modules in a system, accelerating time to market while reducing incremental qualification effort. End users will see a wider selection of graphics options, and faster time-to-market for new GPU hardware.

Reduced Cost

The MXM version 3.0 specification reduces the number of system power rails as well as the mandatory system power required. The use of a single connector allows for better economy of scale. Optimized form factor and height zones provide very cost effective power supply solutions.

Thermo-mechanical Compatibility

Full thermo-mechanical compatibility between module types eliminate the need to trade off between which MXM type to use. MXM version 3.0 allows a general increase in the power density thanks to a well defined thermal environment. There is no need for backside cooling and the new connector design properly supports PCI-Express Gen2 and DisplayPort signal integrity requirements.

System Optimized Z-height

Recognizing the need for lower z-height systems, especially for notebooks, MXM version 3.0 focused on the critical system height stack and reduced the z-height requirement of MXM type A by more than 1 mm compared to previous MXM implementations. Support for an inline connector is also being investigated to further improve the graphic subsystem z-height contribution to the overall z-height of the system.

Future Proof

MXM version 3.0 is designed with the future in mind. It is planned to have at least a 3 year life span with its support for complex display configurations (including the newest DisplayPort standard) that eliminates multiplexer on the system board, several reserved pins, and alignment with the appearance of PCI-Express Gen2 in the mass market.

Other Benefits

Improved boot time, advanced thermal control capability, simplification of graphics module assembly within systems, and the support for OEM customization pins will also benefit members of the MXM version 3.0 ecosystem.

Implementation Details

This section provides a brief overview of the MXM version 3.0 implementation. Refer to the MXM Hardware Specification for details.

Form Factors

MXM version 3.0 specification defines two electrically, mechanically and thermally compatible form factors. These two form factors are shown in Figure 3.

Type A Module

Type A targets mid-range and performance systems

- Board size: 82x70mm
- GPU: 64/128-bit (optimized for 29x29mm)
- TGP: Cost optimized for 35W

Type B Module

Type B targets high-performance and enthusiast systems

- Board size: 82x105mm
- GPU: 256-bit (optimized for 35x35mm)
- TGP: Cost optimized for 75W

Input Voltages

MXM version 3.0 requires the following voltages:

- 7-20V (battery) up to 10A (depending on system capability and charge status)
- 5V 2.5A
- 3.3V 1A

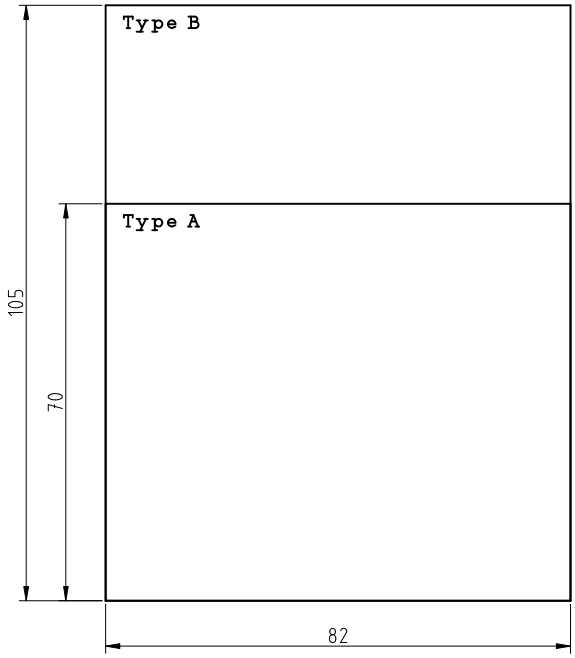

Figure 3: MXM Form Factors

Edge-Fingers

The MXM version 3.0 edge-fingers and connector are derived from the MXM 2.1 HE. The connector has the exact same dimensions and a modified PCB footprint with increased number of contacts to support the extra functionality. The location key was also moved to prevent MXM specification version mismatch.

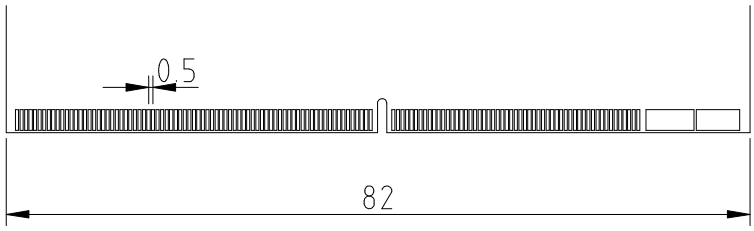

Figure 4: Connector diagram

Keep-Out Zones

Figure 5 shows the height profile for the top side of the module. The entire bottom side of the module is limited to 1.2 mm. Small areas have a reduced height limitation to allow the use of the required backing plate (refer to Figure 8 for details).

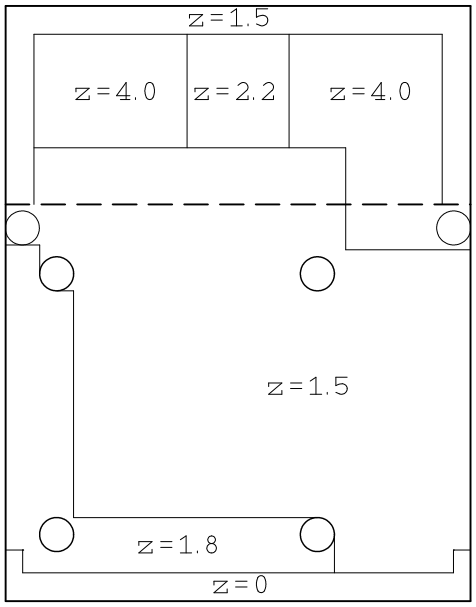

Figure 5: Top Side Height Profile

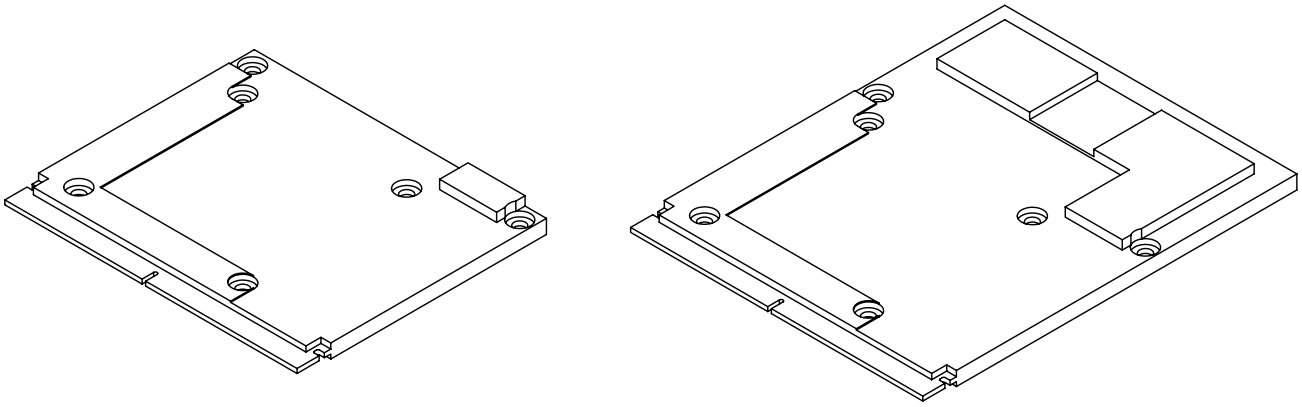

Figure 6: Type A and Type B Volume Models

Universal Thermal Solution

The thermal solution is referenced to the GPU die. The thermal attachment holes are 3.2 mm in diameter placed at the corners of a 46 mm square for both form factors. The GPU must be placed at

the center of the square to guarantee mechanical load balancing for any die size. The thermal solution must cool all the required areas as defined in the specification. The module uses a thermal interface of the appropriate thickness in all locations requiring cooling (e.g. memories, power supply components, etc...).

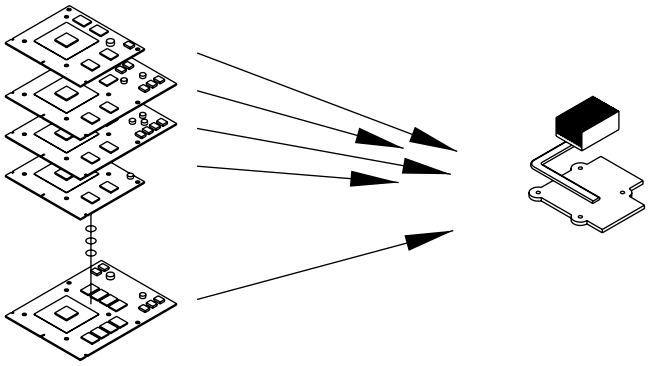

Figure 7: Universal Cooler Concept

Module Backing Plate

A backing plate is required to prevent the board from bending excessively. The backing plate is considered part of the platform to give maximum flexibility to the system designer. The MXM version 3.0 specification defines only a board keep out zone to ensure compatibility.

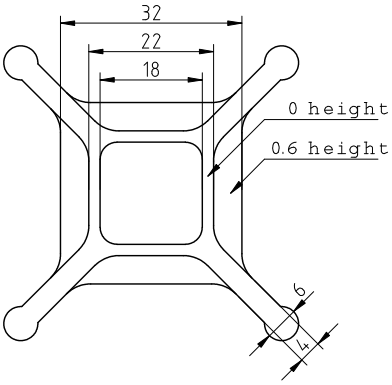

Figure 8: Backing plate keep-out zones

OEM Module Concept

The MXM version 3.0 specification allows system designers the flexibility to customize the module in a OEM shipping configuration. The MXM version 3.0 specification achieves this goal by allowing the freedom to use OEM-specific, non-compliant, modules in an MXM version 3.0 compliant system. Common scenarios are:

Form Factor OEM modules are allowed to use non-standard form factors as long as the system can accommodate MXM version 3.0 standard modules.

VBIOS ROM OEM modules are not required to have a ROM chip as long as the system can correctly operate using a standard MXM version 3.0 module with on-board VBIOS ROM.

Power OEM modules can rely on additional voltages supplied by the motherboard. OEM reserved pins are provided by the specification. All MXM version 3.0 compliant modules will not connect these pins.

Extra Signals OEM modules are allowed to use extra signals provided by the motherboard. OEM reserved pins are provided by the specification. All MXM version 3.0 compliant modules will not connect these pins.

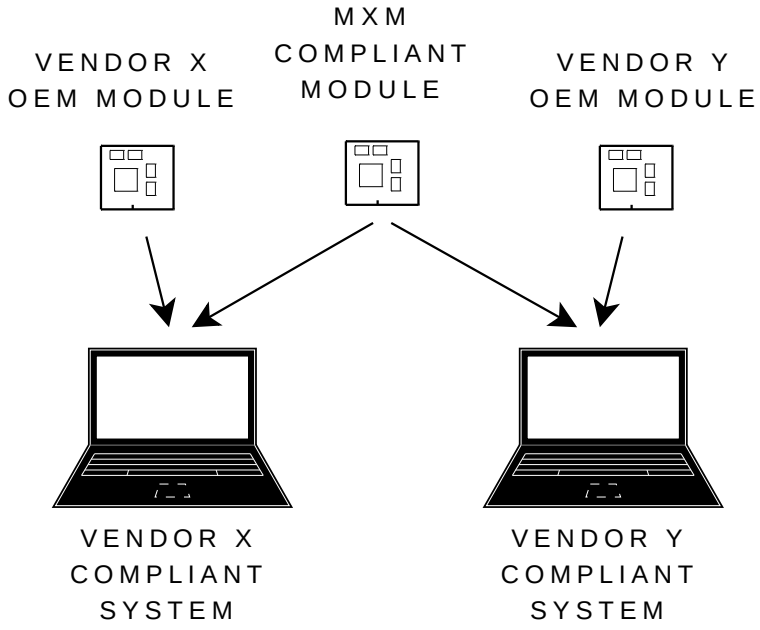

Figure 9: OEM Module Concept